HUMIDITY SEPARATORS
SH25

DESCRIPTION



The ADCA SH25 series horizontal centrifugal separators remove moisture from steam and compressed air systems. Steam or compressed air pass through the separator and, as a result of centrifugal forces, impact and swirling effects, the particles with a heavier specific gravity, such as water and oil droplets, moisture in suspension, dirt and scale are separated from the fluid.
The condensate collected at the bottom of the separator is automatically drained by a suitable steam or compressed air trap, which is supplied separately.

MAIN FEATURES



Inline design.
No moving parts.
Maintenance-free design.

OPTIONS: Flanged drain connection.
Stainless steel construction.

USE: Steam, compressed air and other gases.

AVAILABLE MODELS: SH25/S – carbon steel.

SIZES: 1/2" to 6"; DN 15 to DN 150.

CONNECTIONS: Flanged EN 1092-1 PN 16 or PN 40.
Flanged ASME B16.5 Class 150 or 300.

INSTALLATION: Horizontal with the condensate discharge pointing downwards.
See IMI – Installation and maintenance instructions.

CE MARKING – GROUP 2 (PED – EUROPEAN DIRECTIVE)			
PN 16	**CATEGORY**	**PN 40**	**CATEGORY**
1/2" to 1" – DN 15 to 25	SEP	1/2" to 11/4" – DN 15 to 32	1 (CE marked)
11/4" to 21/2" – DN 32 to 65	1 (CE marked)	11/2" to 3" – DN 40 to 80	2 (CE marked)
3" to 6" – DN 80 to 150	2 (CE marked)	4" to 6" – DN 100 to 150	3 (CE marked)

BODY LIMITING CONDITIONS *					
FLANGED PN 16		**FLANGED CLASS 150**		**FLANGED PN 40 / CLASS 300**	
ALLOW. PRESSURE	**RELATED TEMP.**	**ALLOW. PRESSURE**	**RELATED TEMP.**	**ALLOW. PRESSURE**	**RELATED TEMP.**
16 bar	50 ºC	16 bar	50 ºC	40 bar	50 ºC
14 bar	100 ºC	14 bar	100 ºC	37 bar	100 ºC
13 bar **	195 ºC	13 bar **	195 ºC	31 bar **	239 ºC
12 bar	250 ºC	–	–	27 bar	300 ºC

* Rating according to EN 1092-1:2018; ** PMO – Maximum operating pressure for saturated steam.
Minimum operating temperature: -10 ºC. Design code: AD-Merkblatt.
Body limiting conditions PN 40 or below, depending on the type of connection adopted. Rating PN 40 for threaded and SW versions.

We reserve the right to change the design and material of this product without notice.

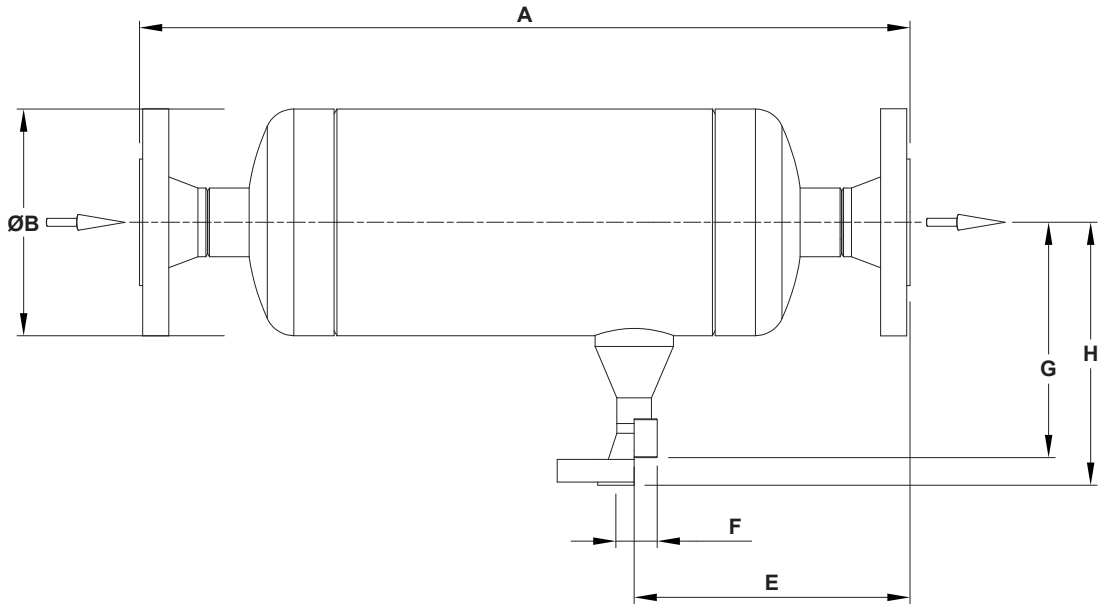

DIMENSIONS (mm)																
SIZE	ØB	F *	G	PN 16		PN 40		PN 16 / PN 40	CLASS 150			CLASS 300			VOL. (L.)	WGT. (kg)
				A	E	A	E	H	A	E	H	A	E	H		
1/2" – DN 15	114	1/2"	134	431	166	431	171	148	450	176	158	460	185	162	2,5	5,7
3/4" – DN 20	114	1/2"	134	435	168	435	173	148	460	180	158	470	190	162	2,6	6,4
1" – DN 25	114	1/2"	134	435	168	435	173	148	465	183	158	479	195	162	2,6	6,9
11/4" – DN 32	140	3/4"	168	475	180	475	186	182	505	195	194	521	209	199	4,6	10,8
11/2" – DN 40	140	3/4"	168	515	183	515	189	182	549	200	194	562	212	199	5,2	11,8
2" – DN 50	168	3/4"	182	550	193	550	210	196	581	208	208	593	232	213	7,8	16,0
21/2" – DN 65	168	3/4"	182	555	195	570	220	196	605	220	208	618	244	213	8,1	16,8
3" – DN 80	219	1"	212	625	245	640	258	222	665	264	237	682	280	243	15,1	27,6
4" – DN 100	273	1"	239	750	273	776	306	249	798	297	264	818	326	270	29,1	40,9
5" – DN 125	324	1"	264	860	289	886	324	274	928	322	289	947	355	296	48,2	62,4
6" – DN 150	356	1"	280	910	298	950	321	290	978	332	305	997	344	312	62,5	80,4

***** As standard, in units manufactured with EN 1092-1 flanges, the drain connection is female threaded ISO 7 Rp. In models with ASME B16.5 flanges, this connection is female threaded NPT. Alternatively, EN 1092-1 or ASME B16.5 flanged drain connections can be supplied (ASME in the same class as main connections).

MATERIALS	
DESIGNATION	MATERIAL
Body	P235GH / 1.0325
Head	P265GH / 1.0425
Inlet / outlet pipe	P235GH / 1.0325
EN flange	P250GH / 1.0460
ASME flange	ASTM A105 / 1.0432
Socket	ASTM A105 / 1.0432
Internals	S235JR / 1.0038

FLANGE CONNECTIONS			
RATING	SIZE	EN STANDARD	ASME STANDARD
PN 16	1/2" to 2" DN 15 to 50 *	EN 1092-1 PN 40	ASME B16.5 Class 150
PN 16	21/2" to 4" DN 65 to 100	EN 1092-1 PN 16	ASME B16.5 Class 150
PN 40	1/2" to 4" DN 15 to 100	EN 1092-1 PN 40	ASME B16.5 Class 300

* Flanges EN 1092-1 PN 16 and PN 40, from DN 15 to DN 50, have the same number and size of holes.

We reserve the right to change the design and material of this product without notice.