HUMIDITY SEPARATORS WITH INTEGRAL STRAINER
SF251

DESCRIPTION

The ADCA SF251 series centrifugal separators remove moisture from steam and compressed air pipelines. Steam or compressed air pass through the separator and, as a result of centrifugal forces, impact and swirling effects, the particles with a heavier specific gravity, such as water and oil droplets, moisture in suspension, dirt and scale are separated from the fluid.
The condensate collected at the bottom of the separator is automatically drained by a suitable steam or compressed air trap, which is supplied separately.





MAIN FEATURES

Several possibilities of installation.
No moving parts.
Stainless steel strainer screen included.

OPTIONS: Threaded condensate connection.
Special tailor-made designs.
Stainless steel construction.

USE: Steam, compressed air and other gases.

AVAILABLE MODELS: SF251/S – carbon steel.

SIZES: 1/2" to 4"; DN 15 to DN 100.

CONNECTIONS: Flanged EN 1092-1 PN 16 or PN 40.
Flanged ASME B16.5 Class 150 or 300.

INSTALLATION: Always with the condensate discharge pointing downwards.
See IMI – Installation and maintenance instructions.

CE MARKING – GROUP 2 (PED – EUROPEAN DIRECTIVE)			
PN 16	**CATEGORY**	**PN 40**	**CATEGORY**
1/2" to 1" – DN 15 to 25	SEP	1/2" to 11/4" – DN 15 to 32	1 (CE marked)
11/4" to 2" – DN 32 to 50	1 (CE marked)	11/2" to 21/2" – DN 40 to 65	2 (CE marked)
21/2" to 4" – DN 65 to 100	2 (CE marked)	3" to 4" – DN 80 to 100	3 (CE marked)

BODY LIMITING CONDITIONS *					
FLANGED PN 16		**FLANGED CLASS 150**		**FLANGED PN 40 / CLASS 300**	
ALLOW. PRESSURE	**RELATED TEMP.**	**ALLOW. PRESSURE**	**RELATED TEMP.**	**ALLOW. PRESSURE**	**RELATED TEMP.**
16 bar	50 ºC	16 bar	50 ºC	40 bar	50 ºC
14 bar	100 ºC	14 bar	100 ºC	37 bar	100 ºC
13 bar **	195 ºC	13 bar **	195 ºC	31 bar **	239 ºC
12 bar	250 ºC	–	–	27 bar	300 ºC

* Rating according to EN 1092-1:2018; ** PMO – Maximum operating pressure for saturated steam.
Minimum operating temperature: -10 ºC; Design code: AD-Merkblatt.

We reserve the right to change the design and material of this product without notice.

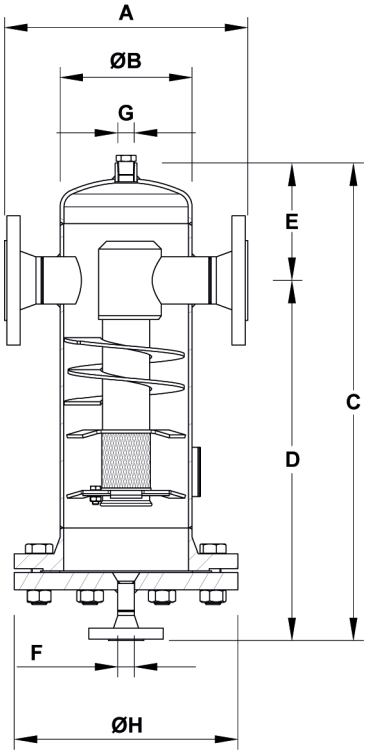

DIMENSIONS (mm) *													
SIZE	PN 16	PN 40	CLASS 150	CLASS 300	ØB	C	D	E	F **	G **	ØH	VOL. (L)	WGT. (kg)
	A	A	A	A									
1/2" – DN 15	230	230	250	259	114	405	285	120	DN 15	1/2"	235	2	21
3/4" – DN 20	230	230	255	264	114	405	285	120	DN 15	1/2"	235	2,6	22,4
1" – DN 25	230	230	262	274	114	405	285	120	DN 15	1/2"	235	3	24
11/4" – DN 32	260	260	290	303	140	540	410	130	DN 15	1/2"	270	5,3	36
11/2" – DN 40	260	260	294	307	140	540	410	130	DN 15	1/2"	270	6	38
2" – DN 50	310	310	341	354	168	610	460	150	DN 15	1/2"	300	11	52,5
21/2" – DN 65	380	400	430	448	219	730	550	180	DN 20	3/4"	375	19,3	94
3" – DN 80	400	410	440	453	219	730	550	180	DN 20	3/4"	375	26	102,5
4" – DN 100	470	490	518	532	273	835	610	225	DN 20	3/4"	450	37	169

* For certified values, consult manufacturer. Volume and weight refer to PN 16 version. Other versions may have slightly different values.
** As standard, in units manufactured with EN 1092-1 flanges, these connections are female threaded ISO 7 Rp. In models with ASME B16.5 flanges, they are female threaded NPT. Alternatively, EN 1092-1 or ASME B16.5 flanged drain connections can be supplied (ASME in the same class as main connections).
Remarks: The top of the separator is supplied with a threaded connection, which size does not exceed the size of the drain connection. This connection is always supplied with a threaded socket. It can be used for air venting or balance pipe connection.

MATERIALS	
DESIGNATION	MATERIAL
Body	P235GH / 1.0325
Head	P265GH / 1.0425
Inlet / outlet pipe	P235GH / 1.0325
EN flange	P250GH / 1.0460
ASME flange	ASTM A105 / 1.0432
Socket	ASTM A105 / 1.0432
Internals	S235JR / 1.0038
Strainer	AISI 304 / 1.4301

FLANGE CONNECTIONS			
RATING	SIZE	EN STANDARD	ASME STANDARD
PN 16	1/2" to 2" DN 15 to 50 *	EN 1092-1 PN 40	ASME B16.5 Class 150
PN 16	21/2" to 12" DN 65 to 300	EN 1092-1 PN 16	ASME B16.5 Class 150
PN 40	1/2" to 12" DN 15 to 300	EN 1092-1 PN 40	ASME B16.5 Class 300

* Flanges EN 1092-1 PN 16 and PN 40, from DN 15 to DN 50, have the same number and size of holes.

We reserve the right to change the design and material of this product without notice.