LRQA CERTIFIED ISO 9001

EHEDG EUROPEAN HYGIENIC ENGINEERING & DESIGN GROUP

Valsteam ADCA is an EHEDG Member

ADCAPure

HIGH PURITY BALL VALVES
M3HP
(1/2" to 2" – DN 10 to DN 50)

DESCRIPTION

The ADCAPure M3HP three piece body ball valves are isolating valves designed for use with clean steam, condensate and other gases and liquids used in high purity and aseptic processes.
The valve is not designed as a control valve and should only be used as an isolating valve, fully open or fully closed.
The product is mainly designed for the pharmaceutical, biotech, semiconductor, cosmetics, fine chemical and food & beverage industries.

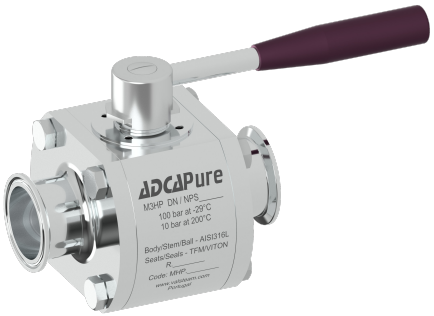

MAIN FEATURES

True or full bore floating ball design.
Completely made from solid bar stock material.
Can be serviced without removal from the pipeline.
Bidirectional.
Antistatic device.
Anti blow out proof stem.
Tube weld with loose body flanges (360º rotation after installation).
ISO 5211 mounting (with adapter for sizes below 1" and DN 20).

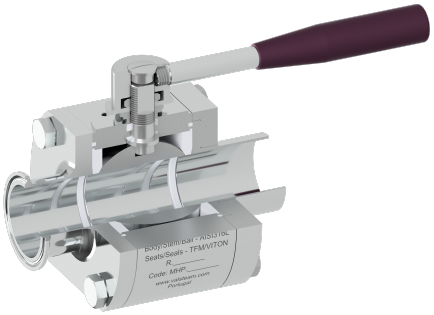

STANDARD SURFACE FINISH

Internal wetted parts: ≤ 0,51 µm Ra – SF1.
External: ≤ 0,76 µm Ra – SF3.
Other surface conditions see TIS.GIA – General information ADCAPure.
Ultrasonic cleaning.

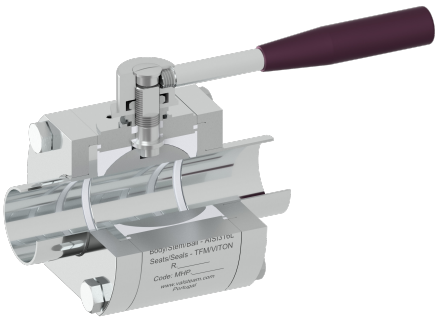

OPTIONS: ISO 5211 mounting with flange adapter for sizes below 1" and DN 20.
Degreased for oxygen use.
Cavity fillers.
Lever with locking system.
Low ferrite stainless steel, C22 and other alloys.
For more options and extras, consult IS M3H.100 – Sanitary Ball Valves Additional Options and Extras.

USE: Clean steam, gases and liquids compatible with the construction.

AVAILABLE MODELS: M3HP – complete bar stock construction.

SIZES: 1/2" to 2"; DN 10 to DN 50.

CONNECTIONS: ASME BPE, DIN or ISO clamp ferrules, tube weld (ETO) ends or a combination of both.
Others on request.

PACKAGING: Assembling and packaging in a clean room certified according to ISO 14644-1.
The product is end capped and sealed with recyclable thermo-shrinkable plastic film, to avoid contamination.

INSTALLATION: See IMI – Installation and maintenance instructions.

CE MARKING – GROUP 2 (PED – EUROPEAN DIRECTIVE)		
PN 63	**PN 100**	**CATEGORY**
DN 25 to 32	1/2" to 1" DN 10 to 20	SEP
11/2" to 2" DN 40 and 50	–	1 (CE Marked)

We reserve the right to change the design and material of this product without notice.

PRESSURE / TEMPERATURE LIMITS

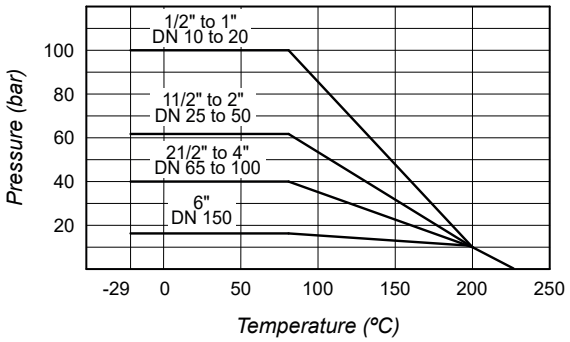

Modified PTFE

Remark: Maximum operating conditions may be limited by the valve end connections due to normative restrictions.

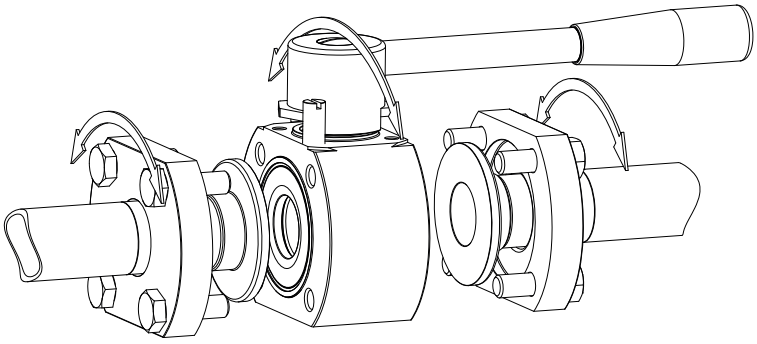

Tube weld easy and quick installation

Valves with tube weld (ETO) connections are fitted, as standard, with loose body flanges which allow installation with no need to align the end connections. After installation the valve can rotate freely 360º to the desired orientation.

LEVER OPTIONS

ROUND LEVER	FLAT LEVER	FLAT LEVER WITH LOCKING SYSTEM

STEM EXTENSION UNITS *

SEF/H	SEF/P	SEF/A
	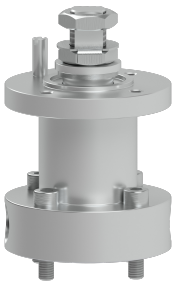	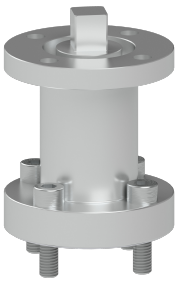

* Consult IS M3H.100 – Sanitary Ball Valves Additional Options and Extras – for further information.

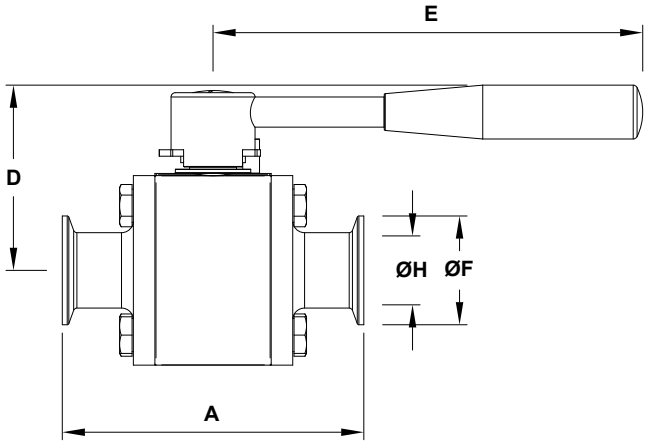

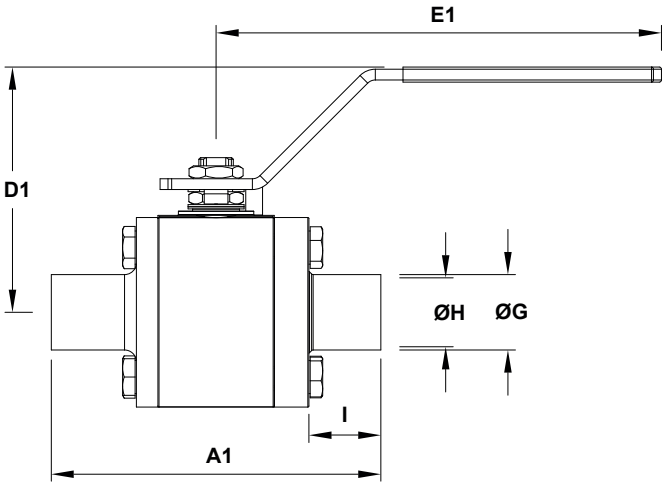

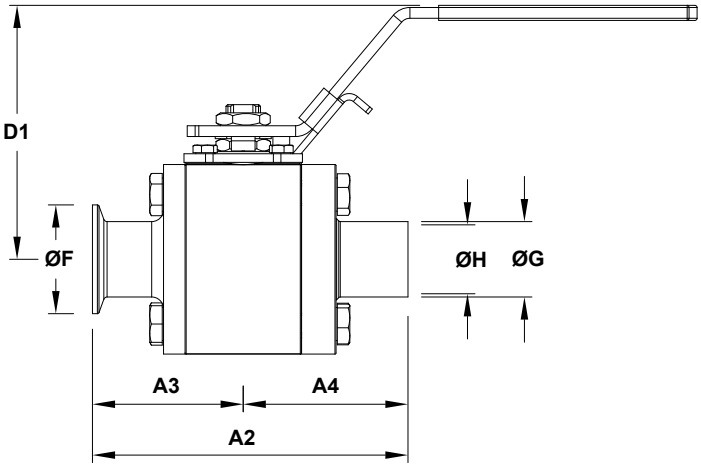

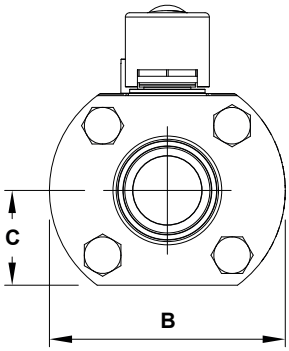

DIMENSIONS – ASME BPE (mm)																		
SIZE	A	A1	A2	A3	A4	B	C	D	D1	E	E1	ØF	ØG	ØH	I	BALL PORT	ISO 5211	WGT. (kg)
1/2"	88,9	101,6	95,5	44	51,5	59	22	49	65	130	150	25	12,7	9,4	25	9,4	F03 *	0,9
3/4"	101,6	114,3	108	51	57	64	24,5	53	69	130	150	25	19,1	15,8	27	15,8	F03 *	1,4
1"	114,3	127	120,5	57	63,5	79	31	68	87	165	176	50,4	25,4	22,1	27	22,1	F04	2,3
11/2"	139,7	152,4	146,5	70	76,5	109	44	86	114	200	207	50,4	38,1	34,8	27	34,8	F05	5,3
2"	165,1	177,8	171,5	82,5	89	134	53	97	124	200	232	63,9	50,8	47,5	28	47,5	F05	8,5

* Flange adapter option is required. See IS M3H.100 – Sanitary Ball Valves Additional Options and Extras.

DIMENSIONS – DIN (mm)																		
SIZE	A	A1	A2	A3	A4	B	C	D	D1	E	E1	ØF	ØG	ØH	I	BALL PORT	ISO 5211	WGT. (kg)
DN 10	90	102	96	45	51	59	22	48	65	130	150	34	13	10	25	10	F03 *	0,8
DN 15	100	114	107	50	57	64	24,5	53	69	130	150	34	19	16	27	16	F03 *	1,1
DN 20	115	127	121,5	57,5	64	79	31	68	86	165	176	34	23	20	27	20	F04	2,2
DN 25	125	135	130,5	62,5	68	89	36	73	92	165	176	50,5	29	26	27	26	F04	2,9
DN 32	140	153	147	71	76	109	44	86	114	200	207	50,5	35	32	27	32	F05	5,1
DN 40	150	161	155	75	80	119	48	90	119	200	207	50,5	41	38	27	38	F05	6,3
DN 50	165	178	172	82	90	134	53	97	124	200	232	64	53	50	28	50	F05	8,4

* Flange adapter is required. See IS M3H.100 – Sanitary Ball Valves Additional Options and Extras.

We reserve the right to change the design and material of this product without notice.

DIMENSIONS – ISO (mm)																		
SIZE	A	A1	A2	A3	A4	B	C	D	D1	E	E1	ØF	ØG	ØH	I	BALL PORT	ISO 5211	WGT. (kg)
DN 10	90	102	96	45	51	59	22	48	65	130	150	25	17,2	14	25	10	F03 *	0,8
DN 15	100	114	107	50	57	64	24,5	53	69	130	150	50,5	21,3	18,1	27	16	F03 *	1,1
DN 20	115	127	121,5	57,5	64	79	31	68	86	165	176	50,5	26,9	23,7	27	22,1	F04	2,2
DN 25	125	135	130,5	62,5	68	89	36	73	92	165	176	50,5	33,7	29,7	27	26	F04	2,9
DN 32	140	153	147	71	76	109	44	86	114	200	207	64	42,4	38,4	27	34,8	F05	5,1
DN 40	150	161	155	75	80	119	48	90	119	200	207	64	48,3	44,3	27	38	F05	6,3
DN 50	165	178	172	82	90	134	53	97	124	200	232	77,5	60,3	56,3	28	50	F05	8,4

* Flange adapter is required. See IS M3H.100 – Sanitary Ball Valves Additional Options and Extras.

MATERIALS

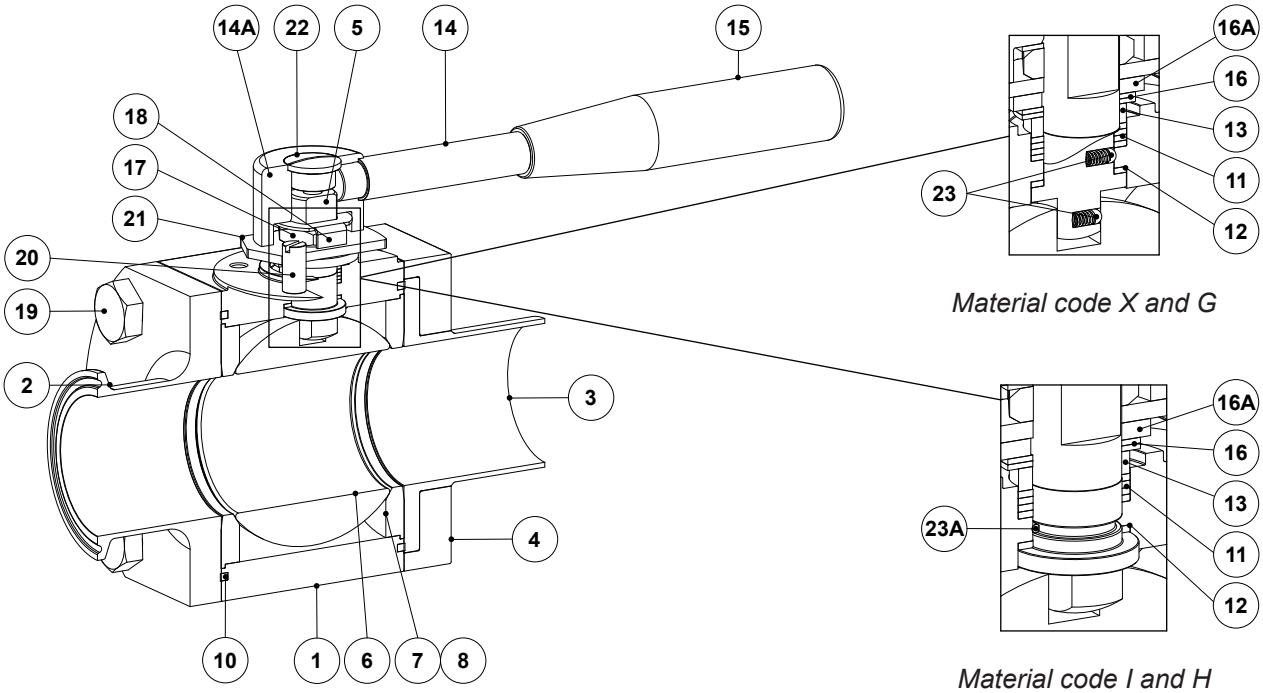

Material code X and G

Material code I and H

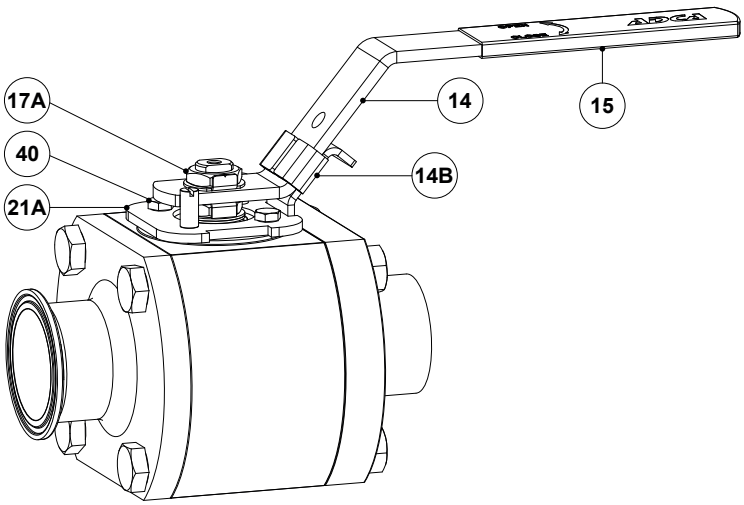

Optional flat lever with locking system

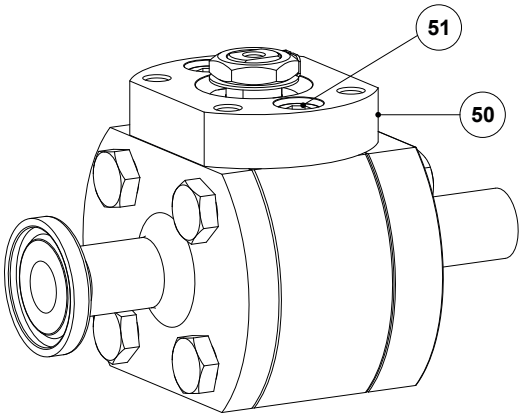

Optional ISO 5211 mounting with flange adapter (only for sizes 1/2" and 3/4" – DN 10 and DN 15)

We reserve the right to change the design and material of this product without notice.

MATERIALS		
POS. No.	**DESIGNATION**	**MATERIAL**
1	Valve body	** AISI 316L / 1.4404; AISI 316L / 1.4435; Alloy C22 / 2.4602
2	Clamp ferrule end connection	** AISI 316L / 1.4404; AISI 316L / 1.4435; Alloy C22 / 2.4602
3	Tube weld end connection	** AISI 316L / 1.4404; AISI 316L / 1.4435; Alloy C22 / 2.4602
4	Flange	AISI 316L / 1.4404
5	Stem	** AISI 316L / 1.4404; AISI 316L / 1.4435; Alloy C22 / 2.4602
6	* Valve ball	** AISI 316L / 1.4404; AISI 316L / 1.4435; Alloy C22 / 2.4602
7	* Standard seat	Modified PTFE
8	* Cavity filler seat	Modified PTFE
10	* Body seal	PTFE
11	* Stem seal	Modified PTFE
12	* Stem thrust seal	Modified PTFE
13	* Spacer	AISI 316 / 1.4401
14	Handle	AISI 304 / 1.4301
14A	Handle body	AISI 304 / 1.4301
14B	Locking piece	AISI 304 / 1.4301
15	Handle end	Vinyl; AISI 304 / 1.4301
16	Spring washer	Stainless steel A2
16A	Washer	AISI 304 / 1.4301
17	Compression nut	AISI 304 / 1.4301
17A	Nut	AISI 304 / 1.4301
18	Lock washer	AISI 304 / 1.4301
19	Body fixing bolt	Stainless steel A2-70
20	Stop pin	AISI 304 / 1.4301
21	Handle stopper	AISI 304 / 1.4301
21A	Locking flange	AISI 304 / 1.4301
22	Handle fixing bolt	AISI 304 / 1.4301
23	Antistatic device	AISI 316 / 1.4401
23A	* O-ring	** FPM; FFKM
40	Fixing bolt	Stainless steel A2-70
50	Flange adapter	AISI 316L / 1.4404
51	Fixing bolt	Stainless steel A2-70

* Available spare parts; ** Others on request.
Remarks: FDA / USP Class VI seals certificate on request.
All valves have a serial number. In case of non-standard valves, this number must be supplied if spare parts are ordered.

We reserve the right to change the design and material of this product without notice.

LRQA CERTIFIED ISO 9001

ADCAPure

ORDERING CODES M3HP											
VALVE MODEL	**MHP**	**X**	**X**	**X**	**F**	**X**	**X**	**CB**	**X**	**10**	
M3HP – Three piece ball valve	**MHP**										
LEVER HANDLE											
Round lever in stainless steel with plastic end		**X**									
Round lever with complete stainless steel construction		**1**									
Flat lever in stainless steel with plastic cover		**2**									
Flat lever in stainless steel with plastic cover and locking system		**3**									
Bare stem		**9**									
MATERIAL											
AISI 316L / 1.4404			**X**								
AISI 316L / 1.4404 with end connections in AISI 316L / 1.4435 **(a)**			**G**								
AISI 316L / 1.4435			**I**								
Alloy C22 / 2.4602			**H**								
SEAT DESIGN											
Standard seats				**X**							
Cavity fillers				**F**							
SEAT MATERIAL											
Modified PTFE					**F**						
SURFACE FINISH (b)											
Standard surface finish						**X**					
Mirror mechanical polished external surfaces (SF1)						**P**					
Electropolished internal wetted parts (SF5)						**E**					
SPECIAL FEATURES											
None							**X**				
Degreased for oxygen							**O**				
Condensate drain connection – Clamp ferrule **(c)**							**C**				
Condensate drain connection – Tube weld (ETO) **(c)**							**T**				
PIPE CONNECTIONS											
Clamp ferrule ASME BPE								**CB**			
Clamp ferrule DIN (DIN 32676-A)								**CD**			
Clamp ferrule ISO (DIN 32676-B)								**CI**			
Tube weld (ETO) according to ASME BPE								**TB**			
Tube weld (ETO) according to DIN 11866-A (DIN 11850-2)								**TD**			
Tube weld (ETO) according to DIN 11866-B (ISO 1127)								**TI**			
TC/ETO combination ASME BPE								**CTB**			
TC/ETO combination DIN 32676-A / DIN 11866-A								**CTD**			
TC/ETO combination DIN 32676-B / DIN 11866-B								**CTI**			
BALL PORT											
True bore (ASME BPE and DIN) or full bore (ISO)									**X**		
SIZE											
DN 10										**10**	
1/2" or DN 15										**15**	
3/4" or DN 20										**20**	
1" or DN 25										**25**	
DN 32										**32**	
11/2" or DN 40										**40**	
2" or DN 50										**50**	
SPECIAL CONSTRUCTION / ADDITIONAL OPTIONS											
Full description or additional codes have to be added in case of a non standard combination											**E**

(a) Only available with tube weld (ETO) ends. **(b)** Consult TIS.GIA – General information ADCAPure – for further details and other surface finish options. **(c)** According to ASME BPE, DIN or ISO depending on selected pipe end connections. Only available with standard seats.