SANITARY TANK BLANKETING REGULATORS
BKR2 (Low pressure regulator)

DESCRIPTION

Tank blanketing valves are commonly used in tank storage systems to prevent and protect against explosions (avoiding flammable liquids being vented from vessel), to control product contamination against external air that may fill the vapour space, to reduce evaporation losses (consequently, production losses), to reduce internal corrosion (caused by air and moisture) and to prevent vacuum condition.

The blanketing process consists in covering the stored medium, usually a liquid, with a gas (normally N2).

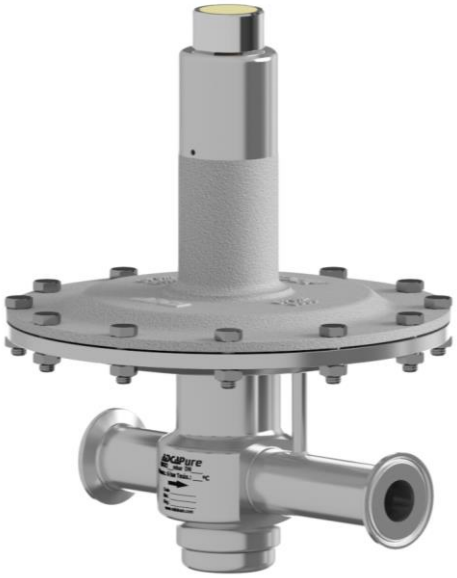

MAIN FEATURES

Compact design.

No rising stem, except when supplied with top cap.

STANDARD SURFACE FINISH

Body and internal wetted parts: ≤ 0,51 micron Ra – SF1.

Body external: ≤ 0,76 micron Ra – SF3.

Cover: internal machined; external as casted.

Other surface conditions see IS PV20.00 E – Technical information.

Ultrasonic cleaning.

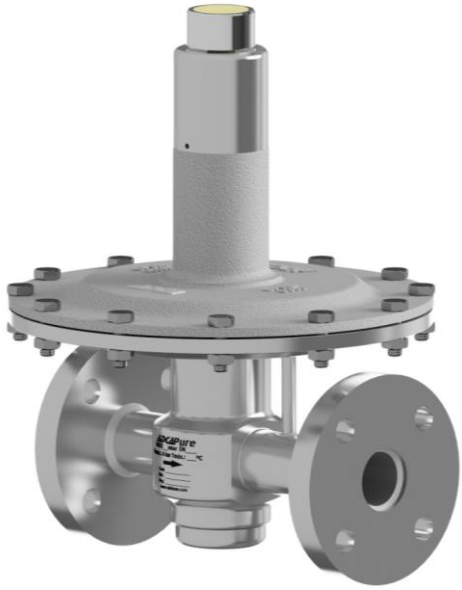

OPTIONS: Diaphragm leakage line connection.
Gauge connection on body.
External pulse line (recommended for low set pressures < 10 mbar or high flow).
Dome loaded (for higher pressure control).
Blanketing with vacuum.
Top cap (adjusting screw sealing).
Hastelloy wetted parts.
ATEX version.

USE: Compressed air, nitrogen and other gases compatible with the construction.

AVAILABLE MODELS: BKR2 – Low pressure regulator.

SIZES: 1” – DN 25.

OUTLET SPRING RANGES: 5 to 500 mbar (4000 mbar with dome load).

CONNECTIONS: Clamp ends or others on request.

PACKAGING: Assembling and packaging in a clean room certified according to ISO 14644-1.
The product is end capped and sealed with recyclable thermo-shrinkable plastic film, to avoid contamination.

INSTALLATION: Vertical installation recommended (to allow draining) or horizontal as close to process as possible in order to prevent long pipe sections and flow restrictions.
For an economical consumption of blanketing gas, the pressure must be adjusted to remain slightly above the atmospheric pressure, while filling and emptying the vessel. See IMI.

ORDER REQUIREMENTS: Type of fluid.
Maximum operating temperature.
Inlet pressure and required outlet pressure.
Capacity (maximum and minimum).

CE MARKING (PED – European Directive)	
PN16	**Category**
1’’ – DN25	SEP

CE MARKING – ATEX VERSION (ATEX – European Directive)	
PN16	**Category**
DN 25	Ex h IIB T6...T3 Gb

AIR CAPACITIES (Nm³/h) Max. inlet pressure 6 bar – Seat Ø 8 mm										
SIZE	OUTLET PRESS.	INLET PRESSURE (barg)								
		0,1	0,5	0,8	1	2	3	4	5	6
1” – DN 25	5 to 10	4	20	32	40	63	85	102	125	140
1” – DN 25	10 to 50	4	20	32	40	63	85	102	125	140
1” – DN 25	20 to 200	–	20	32	40	63	85	102	125	140
1” – DN 25	50 to 500	–	–	–	40	63	85	102	125	140

Outlet pressure should not be more than 50% of the inlet, in order to reach the mentioned flow rates.

AIR CAPACITIES (Nm³/h) Max. inlet pressure 12 bar – Seat Ø 5 mm							
SIZE	OUTLET PRESS.	INLET PRESSURE (barg)					
		2	4	6	8	12	16
1” – DN 25	5 to 10	21	35	49	62	90	118
1” – DN 25	10 to 50	21	35	49	62	90	118
1” – DN 25	20 to 200	21	35	49	62	90	118
1” – DN 25	50 to 500	21	35	49	62	90	118

Outlet pressure should not be more than 50% of the inlet, in order reach the mentioned flow rates.

DIMENSIONS (mm) CLAMP FERRULES ASME BPE									
SIZE	A	B	C	D	F	H	d1	d2 *	WGT. (kg)
1”	210	49	244	230	50,5	22,1	25	15,75	8,5

DIMENSIONS (mm) CLAMP FERRULES DIN									
SIZE	A	B	C	D	F	H	d1	d2 *	WGT. (kg)
DN 25	210	49	244	230	50,5	26	25	15,75	8,5

Clamp ferrules DIN 32676 Series A;
Tube weld DIN 11866 Series A (DIN 11850 Series 2).

DIMENSIONS (mm) CLAMP FERRULES ISO									
SIZE	A	B	C	D	F	H	d1	d2 *	WGT. (kg)
DN 25	210	49	244	230	50,5	29,7	25	15,75	8,5

Clamp ferrules DIN 32676 Series B;
Tube weld DIN 11866 Series B (ISO 1127 Series 1).

DIMENSIONS (mm) FLANGES DIN EN PN16							
SIZE	A	B	C	D	d1	d2 *	WGT. (kg)
DN 25	210	49	244	230	25	15,75	10,6

* Special versions or non standard sanitary clamp ferrules are available on request. Size 1/4” also available for the flanged version.

LIMITING CONDITIONS		
Valve model		BKR2
Body design conditions		PN16
Max. upstream pressure	Seat Ø 5 mm	12 bar
	Seat Ø 8 mm	6 bar
Max. downstream pressure		500 mbar
Min. downstream pressure		5 mbar
Max. design temperature *		130 ºC

* Other on request.

Warning: Blanketing valves are not substitute of safety valves or vacuum relief valves.

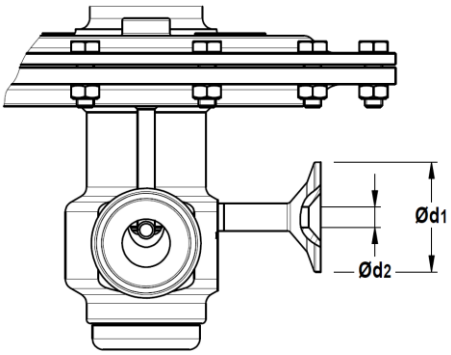

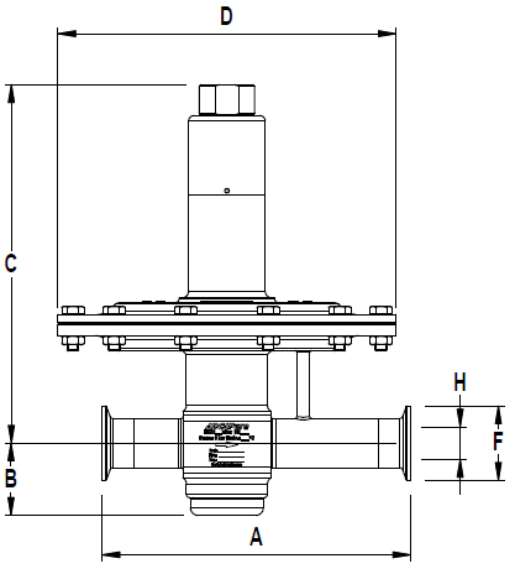

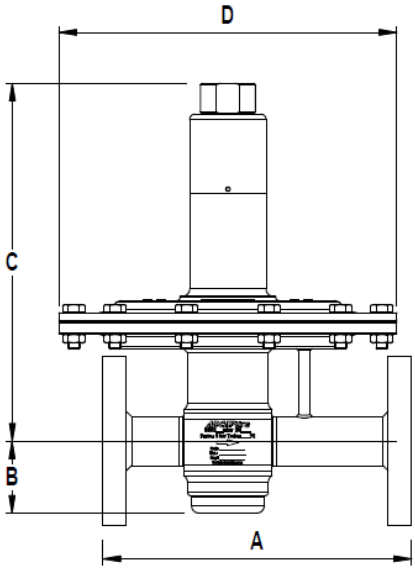

MATERIALS		
POS. Nº	**DESIGNATION**	**MATERIAL**
1	Valve body	AISI 316L / 1.4404
		Hastelloy C22 / 2.4602
2	Diaphragm top cover	CF3M / 1.4409
2A	Diaphragm lower cover	AISI 316L / 1.4404
		Hastelloy C22 / 2.4602
3	Seat cover	AISI 316L / 1.4404
		Hastelloy C22 / 2.4602
4	* O-ring	EPDM
5	* Piston	AISI 316L / 1.4404
		Hastelloy C22 / 2.4602
6	* Valve head	AISI 316L / 1.4404
		Hastelloy C22 / 2.4602
7	* O-ring	EPDM
8	* Valve spring	AISI 302 / 1.4300 (Polished)
		Hastelloy C22 / 2.4602
9	Seat	AISI 316L / 1.4404
		Hastelloy C22 / 2.4602
10	* O-ring	EPDM
11	Piston guide	PTFE
12	Stem	AISI 316L / 1.4404
		Hastelloy C22 / 2.4602
13	Stem guide	PTFE
14	Retaining ring	Stainless steel A2
		Hastelloy C22 / 2.4602
15	Diaphragm plate	AISI 316L / 1.4404
		Hastelloy C22 / 2.4602
16	* O-ring	EPDM
17	Bolts	Stainless steel A2-70
18	Nuts	Stainless steel A2-70
19	Spring cover	AISI 316L / 1.4404
20	* Lower diaphragm	PTFE (Gylon)
21	* Upper diaphragm	EPDM
22	Diaphragm plate	AISI 316L / 1.4404
23	Nut	Stainless steel A2-70
24	Washer	AISI 316 / 1.4401
25	Lower spring guide	AISI 316L / 1.4404
26	* Regulating spring	AISI 302 / 1.4300
27	Top spring plate	AISI 316L / 1.4404
28	Adjustment screw	Brass
29	Bearing	Corrosion resistant steel
30	* O-ring	NBR
31	Regulating nut	AISI 316L / 1.4404
32	Ext. bowed shaft ring	Stainless steel
33	Cover nut	Plastic

* Available spare parts;

FDA / USP Class VI seals certificate on request.

All valves have a serial number. In case of non standard valves, this number must be supplied if spare parts are ordered.

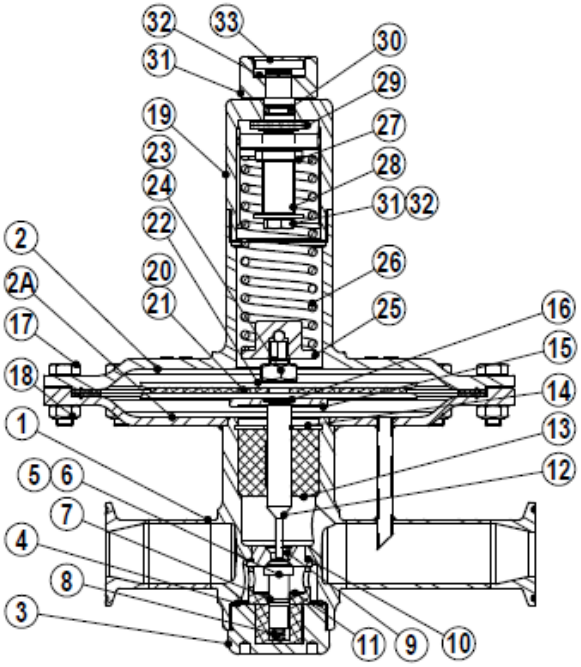

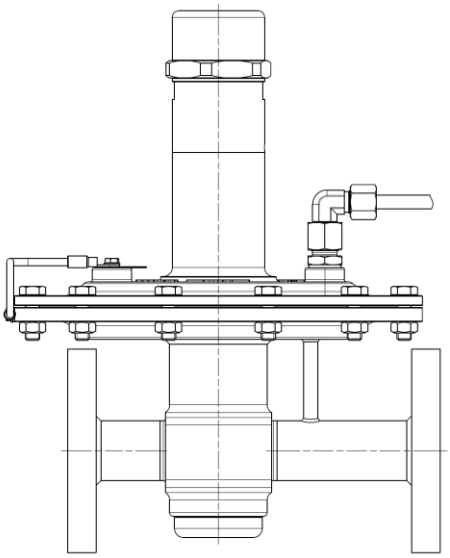

ATEX compliant version

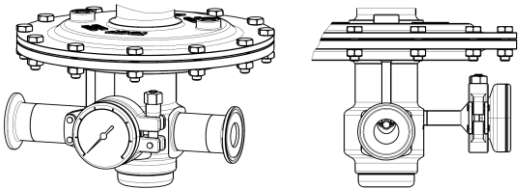

Optional pressure gauge connection.

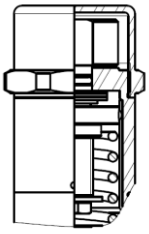

Optional top cap adjusting screw sealing.

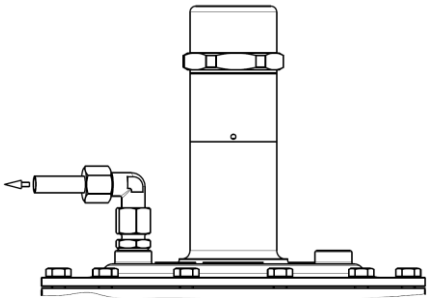

Optional 1/4" diaphragm leakage connection.

TYPICAL INSTALLATION

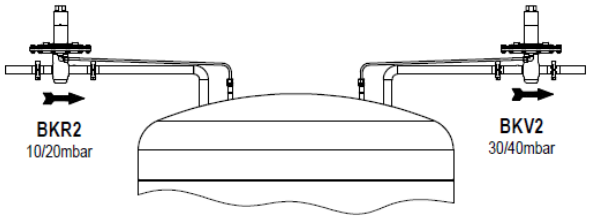

Blanketing with overpressure

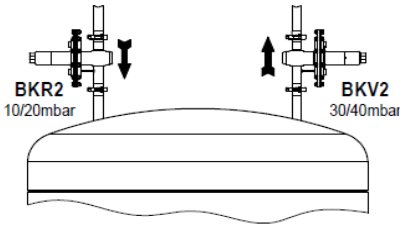

ORDERING CODES BKR2

Valve model	BR	A	5	T	E	I	X	X	X	0	D	25	E
BKR2 – AISI 316L / 1.4404 Blanketing low pressure regulator	**BR**												
BKR2 – Hastelloy C22 / 2.4602 Blanketing low pressure regulator	**BRH**												
Outlet spring range													
Dome loaded for higher pressure control		**A**											
5 to 10 mbar		**0**											
10 to 50 mbar		**1**											
20 to 200 mbar		**2**											
50 to 500 mbar		**3**											
Valve seat orifice													
Seat diameter 5 mm			**5**										
Seat diameter 8 mm			**8**										
Diaphragm material													
PTFE (Gylon)				**T**									
Valve head													
EPDM					**E**								
Regulating knob, top cap and captured vent													
Stainless steel regulating knob						**I**							
Top cap (adjusting screw sealing)						**T**							
Stainless steel regulating knob w/ diaphragm cover leakage connection in case of diaphragm failure						**L**							
Top cap (adjusting screw sealing) w/ diaphragm cover leakage connection in case of diaphragm failure **(a)**						**U**							
Gauge port options													
Without gauge ports							**X**						
Tri-clamp gauge port on the left side (rel. to the flow direction) – Downstream pressure							**7**						
Tri-clamp gauge port on the right side (rel. to the flow direction) – Downstream pressure							**6**						
Tri-clamp gauge port on both sides - Downstream pressure							**5**						
Threaded gauge port on the left side (rel. to the flow direction) – Downstream pressure							**4**						
Threaded gauge port on the right side (rel. to the flow direction) – Downstream pressure							**3**						
Threaded gauge port on both sides - Downstream pressure							**2**						
Surface finish, special services and options													
None (fine machined)								**X**					
Mechanical polishing								**P**					
Electropolishing								**E**					
Special features													
None									**X**				
External pulse line													
Internal pulse orifice (standard)										**0**			
External pulse line connection 1/4"										**1**			
Pipe connection													
Clamp ferrule ASME BPE											**D**		
Clamp ferrule DIN (DIN 32676-A)											**F**		
Clamp ferrule ISO (DIN 32676-B)											**E**		
Flanged EN 1092-1 PN16											**L**		
Size													
DN 25												**25**	
...													
Special valves / Extras													
ATEX compliant version													**EX**
Full description or additional codes have to be added in case of a non standard combination													**E**

(a) Choose this option in case of ATEX compliant version.